COMPONENT HARDWARE®

1890 Swarthmore Avenue, PO Box 2020, Lakewood, NJ 08701
Phone: 800-526-3694, 732-363-4700, Fax: 732-364-8110
www.componenthardware.com

PROJECT NAME: _____

LOCATION: _____

SPECIFIER ITEM NO. _____ **QTY:** _____

COMPONENT HARDWARE PART NO. _____

Component Hardware® Medium Duty 2-3/8” x 3-3/8” Rigid Plate Caster with Black Polyolefin Wheel

CMR1-xBPN

CMR1-3BPN 3” Wheel
CMR1-4BPN 4” Wheel
CMR1-5BPN 5” Wheel



Caster, Medium Duty, 2-3/8” x 3-3/8” Rigid Plate, Black Polyolefin Wheel

Medium Duty Construction

- Zinc plated steel yoke construction
- 1-1/4” (32mm) tread width
- Black polyolefin wheel
- Rigid yoke - does not swivel
- Load capacity 250 lbs. (110kg) per wheel
- 2-3/8” x 3-5/8” (60mm x 90mm) rigid plate with slotted mounting holes spaced on 1-3/4” x 2-7/8” (45mm x 73mm) centers
- Mounting holes accept 1/4” or 5/16” diameter bolts/screws

SPECIFICATIONS:

Model No.	Wheel Diameter	Load Height
CMR1-3BPN	3” (76mm)	4” (102mm)
CMR1-4BPN	4” (102mm)	5” (127mm)
CMR1-5BPN	5” (127mm)	6” (152mm)

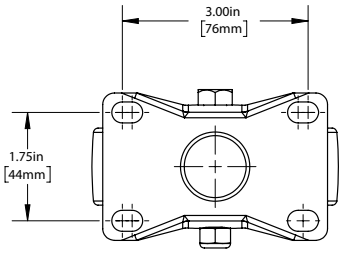

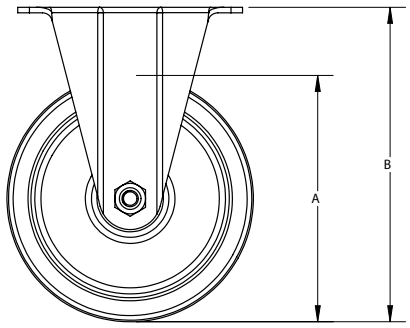

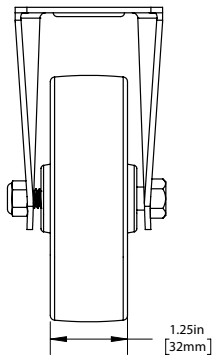

Load Height: 4” (102mm), 5” (127mm), 6” (152mm)
Wheel: 3” (76mm), 4” (102mm), 5” (127mm)
Material: Zinc plated steel

Shipping weight - 2 lbs

Dimensions shown in inches (mm) are for reference only and are subject to change.

NSF COMPONENT

Specifications subject to change without notice ©Component Hardware